PROFIL TRANSVERSAL TIP 1
Lucrari de protectie impotriva inundatiilor
Aplicabil pe partea stanga a c.f.
scara 1:100

CROSS SECTION TYPE 1
Flooding protection works
Applicable on the left side on the railway track
scale 1:100

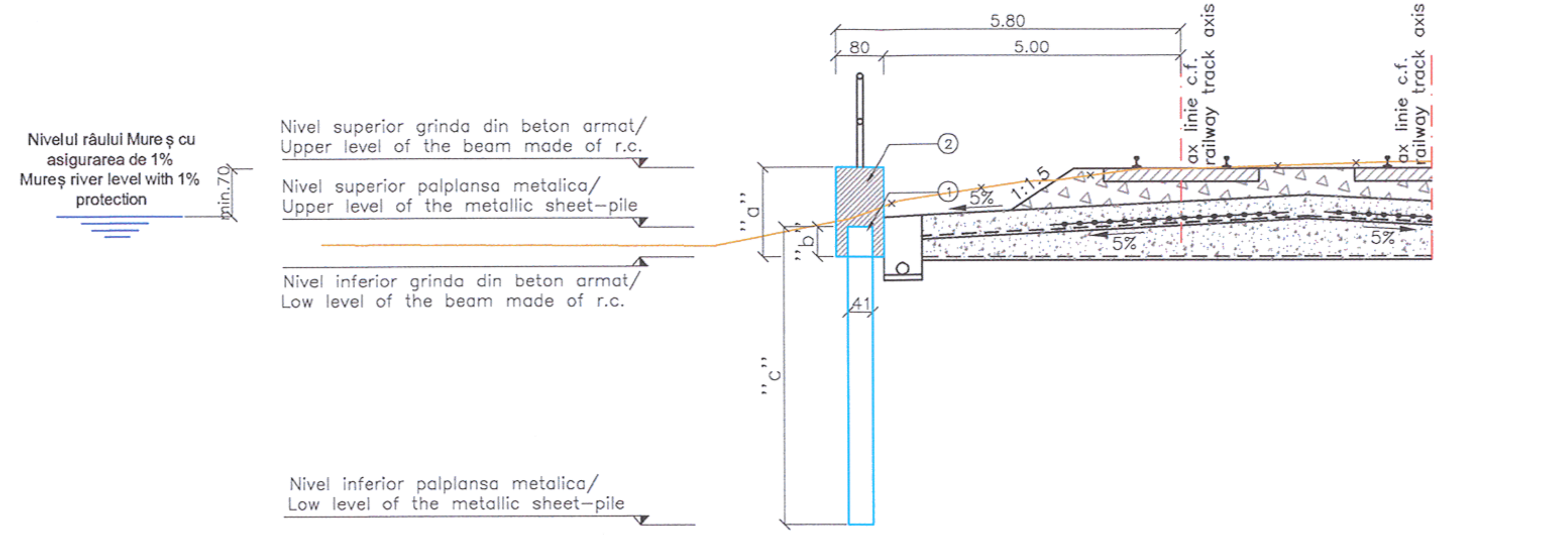

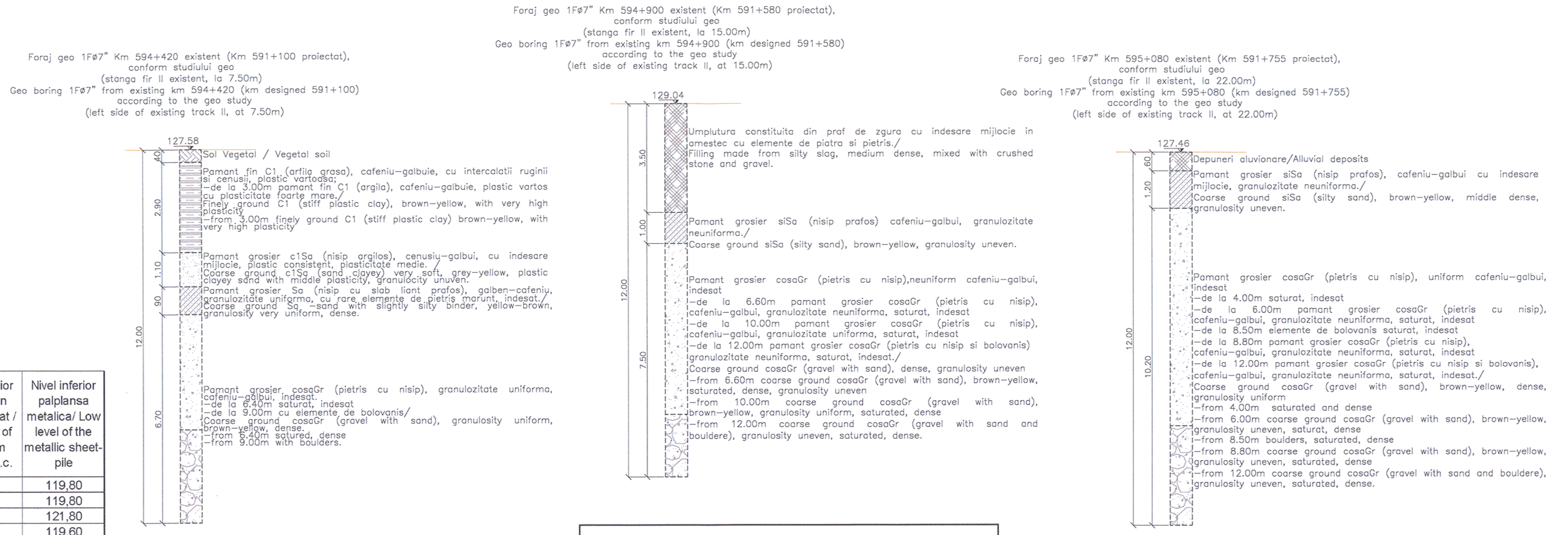

ELEMENTELE GEOMETRICE SI APLICABILITATEA LUCRARILOR DE PROTECTIE IMPOTRIVA INUNDATIILOR
GEOMETRIC ELEMENTS AND THE APLICABILITY OF THE FLOODING PROTECTION WORKS

Nr. crt/ No.	Poziția față de axa c.f./ Position against the railway axis	Aplicabilitate/ Aplicability		Lungime (m)/ Length (m)	Dimensiuni (m)/ Dimensions (m)			Nivel superior grinda din beton armat / Upper level of the beam made of r.c.	Nivel superior palplansa metalica/ Upper level of the metallic sheet-pile	Nivel inferior grinda din beton armat / Low level of the beam made of r.c.	Nivel inferior palplansa metalica/ Low level of the metallic sheet-pile
					a	b	c				
1	stânga/left	km 590+375,00	km 590+515,54	140,54	3,50	2,50	10,00	130,80	129,80	127,30	119,80
2	stânga/left	km 590+523,50	km 590+638,94	115,44	3,50	2,50	10,00	130,80	129,80	127,30	119,80
3	stânga/left	km 590+638,96	km 590+879,90	240,94	2,00	1,00	8,00	130,80	129,80	128,80	121,80
4	stânga/left	km 590+879,92	km 590+917,56	37,64	2,50	1,50	10,00	130,60	129,60	128,10	119,60
5	stânga/left	km 590+931,00	km 591+116,72	185,72	2,50	1,50	10,00	130,60	129,60	128,10	119,60
6	stânga/left	km 591+116,74	km 591+282,38	165,64	3,00	2,00	11,00	130,60	129,60	127,60	118,60
7	stânga/left	km 591+282,40	km 591+352,66	70,26	2,50	1,50	10,00	130,60	129,60	128,10	119,60
8	stânga/left	km 591+352,68	km 591+377,76	25,08	3,00	2,00	10,00	130,40	129,40	127,40	119,40
9	stânga/left	km 591+801,48	km 591+886,80	85,32	1,50	0,50	10,00	130,40	129,40	128,90	119,40
10	stânga/left	km 591+886,82	km 592+077,56	190,74	1,50	0,50	10,00	130,20	129,20	128,70	119,20
11	stânga/left	km 592+397,00	km 592+527,50	130,50	2,50	1,50	10,00	130,10	129,10	127,60	119,10
12	stânga/left	km 592+527,52	km 592+750,90	223,38	3,00	2,00	10,00	129,90	128,90	126,90	118,90
Lungime totală (m) / Total length (m)				1611,46							

LEGENDA:
1. Palplanse metalice tip VL 605 (600x410x12.8mm)
2. Grinda din beton armat clasa C30/37

LEGEND:
1. Metallic sheet-piles type VL 605 (600x410x12.8mm)
2. Beam made of r.c. class C30/37

LEGENDA BETOANELOR/CONCRETE LEGEND

Beton armat clasa C30/37, XF1+XC4
Reinforced concrete class C30/37, XF1+XC4

NOTA:
1. Profilul transversal tip are ca obiect detalierea si aplicabilitatea lucrarilor de protectie impotriva inundatiilor;
2. Elementele geometrice ale terasamentului c.f., dimensiunile treptelor de infratire cat si nivelul decaparii fac obiectul specialitatii "Suprastructura si Terasamente c.f.". Acestea se regasesc in cadrul aceluiasi proiect in documentatii separate.
3. Palplansele se vor amplasa la distanta de 5m fata de linia c.f. cea mai apropiata de acestea, pe partea stanga a c.f., conform planului de situatie si profilelor transversale.
4. Dimensiunile lucrarii de consolidare s-au stabilit pe baza informatiilor din studiul geotehnic, respectiv forajele 1Fø7" (km 594+420 existent/km 591+100 proiectat), 1Fø7" (km 594+900 existent/km 591+580 proiectat) si 1Fø7" (km 595+080 existent/km 591+755 proiectat). In cazul in care, in timpul executiei se vor constata neconcordante cu datele initiale (variatii ale straturilor) se va convoca atat proiectantul, cat si geotehnicianul pentru adaptarea lucrarilor la situatia existenta in teren.
5. Profilul transversal tip s-a intocmit pe baza profilelor transversale curente scara 1:200. Pentru mai multe detalii, in paralel cu prezentul plan general, se vor consulta si profilele transversale curente.
6. Daca se constata diferente mari fata de situatia proiectata, in special eroziuni si modificari ale formei si pantei taluzului albiei minore, se va instiinta Proiectantul pentrua daptarea la teren a solutiilor proiectate.
7. Deasemenea dupa fiecare viitura se va verifica starea lucrarilor precum si integritatea saltelelor, dupa caz, luandu-se masurile de remediere care se impun.

NOTE:
1. The purpose of the typical cross-section is to detail and apply the flooding protection works;
2. The geometric elements of the railway embankment, the dimensions of the benches and also the level of the scraping are the object of specialty Railway "Superstructure and Embankments". They can be found within the same design but in different documentations.
3. The sheet-piles will be located at 5m distance away from the closest raiwlay line, on the left side of the railway track, according to the layout plan and the cross sections.
3. The dimensions of consolidation work were decided based on the information within the geotechnical study, respective borings 1Fø7" (km 594+420 existing/km designed 591+100), 1Fø7" (km 594+900 existing/km designed 591+580) si 1Fø7" (km 595+080 existing/km designed 591+755). If during execution, incongruities will be noticed as regards the initial data (variations of layers), both the designer and the geo-technician will be convoked to adapt the works to the existing site situation.
4. The cross section type was prepared based on current cross-sections from scale 1:200. For further details, you can also see the current cross-section in the same time this general layout.
5. If major differences are noticed as compared to the designed situation, mainly erosions and modifications of shape and slope of the minor riverbed, the Designer will be informed for adapting the site to the designed solutions.
6. Also, after each flood, the works' status will be checked as well as the integrity of mattresses, depending on the case, taking necessary remedy measures.
7. The propping up of drilled piles will be located at 5m distance away from the closest raiwlay line, on the left side of the railway track, according to the layout plan and the cross sections.

Acest plan anuleaza si inlocuieste versiunea anterioara.
This plan cancels and replaces previous version.

Verificator / Expert Checker / Expert	Cerinta Requirement	Semnatura Signature	Referat / Expertiza Report / Expertise

European Investment Bank

MINISTERUL TRANSPORTURILOR

BENEFICIAR / BENEFICIARY :
COMPANIA NAȚIONALĂ DE CĂI FERATE "CFR" SA

PROIECTANT / DESIGNER: PŐYRY			Data Date	Semnatura Signature
Aprobat Approved	Șef de echipă Team leader	C. Teodorescu	01.2013	
Verificat Checked	Expert Cheie Key Expert	L. Mărculescu	01.2013	
Subcontractant / Subcontractor		VIOTOP		
Aprobat Approved	Adjunct Șef de echipă Deputy Team leader	A.M. Baicu	01.2013	
Proiectat Designed	Inginer Engineer	L. Radu	01.2013	

"Reabilitarea liniei c.f. Frontieră - Curtici - Simeria, parte componentă a coridorului IV Pan - European pentru circulația trenurilor cu viteză maximă de 160 km/h"
Tronsonul 2-A : km 614 - cap Y Bârzava
"Rehabilitation of the Railway Line Border - Curtici - Simeria, component Part of the IV Pan - European Corridor for the Trains Circulation with maximum speed of 160 km/h"
Section 2-A : km 614 - end Y Bârzava

Project 9i 35311.1

Faza / Phase: PTH+CS / TD+TS

Denumire desen / Drawing name:
STAȚIA RADNA / RADNA STATION
Profil transversal tip 1 / Cross section type 1

Scara / Scale	Revizia / Revision	Cod desen / Drawing Code	Nr / No
1:100	1/16.05.2013	PT.02.01.06.CO.200	01/03